INCOLOR SKYPIVOT SPR / SP3 天枢轻量化碳纤维曲柄组 安装指南

INCOLOR

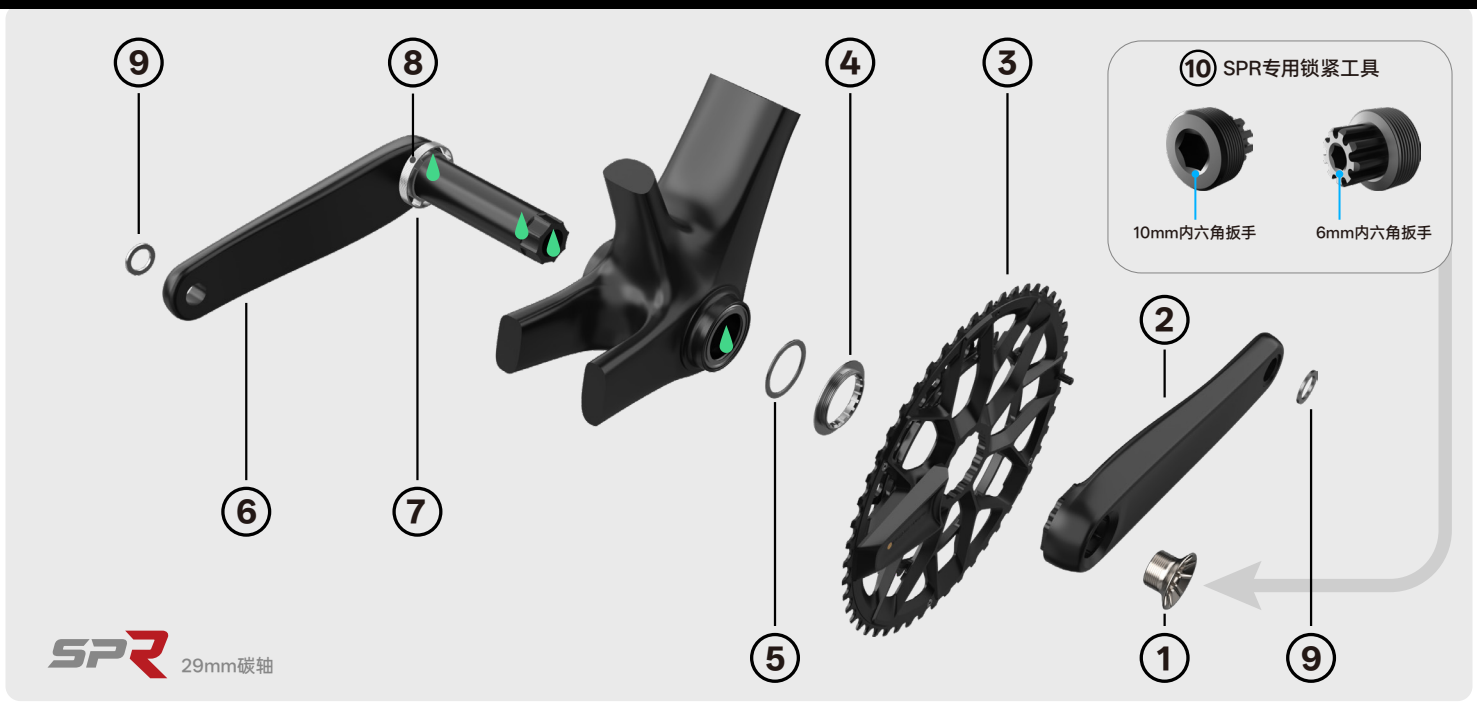

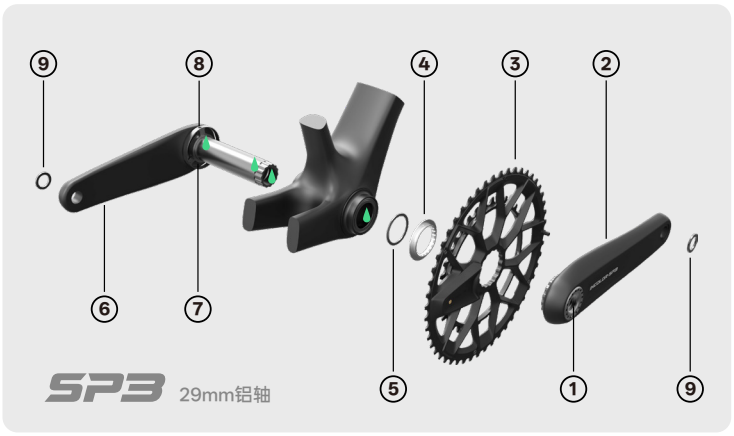

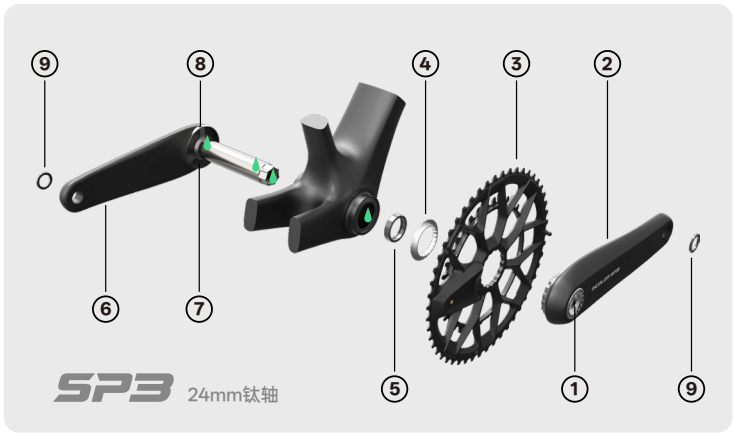

在绿色位置表面使用润滑脂

① 驱动侧固定螺丝	② 驱动侧曲柄	③ 盘片组	④ 盘爪锁紧环	⑤ 轴心垫圈/环*
⑥ 非驱动侧曲柄	⑦ 预压调节环	⑧ 预压调节环锁紧螺丝	⑨ 脚踏垫片	⑩ SPR专用锁紧工具 仅SPR曲柄组专有

*29轴为轴心垫圈，24轴为轴心环。29轴产品标配 1mm、1.5mm 轴心垫圈各一个，1.5mm 垫圈需安装至 ⑤ 的位置，1mm 垫圈根据不同车架及中轴适配，在预压调节环与 BB 外壳之间按需添加使用。

安装流程：

1. 安装前确认非驱动侧预压调节环处于归零状态。在 BB 内侧或芯轴安装接触面均匀涂抹适量润滑油。

2. **SPR:** 根据实际安装需求添加轴心垫圈，正确安装左右曲柄，使用专用锁紧工具，并使用 10mm 内六角扳手锁紧驱动侧固定螺丝，锁紧扭矩为 45 N·m。
（拆卸曲柄：使用专用锁紧工具，配合 10mm 内六角扳手拆除驱动侧固定螺丝。随后，将专用锁紧工具的另一端旋入驱动侧曲柄，并使用 6mm 内六角扳手持续拧紧，使非驱动侧曲柄与驱动侧曲柄分离）

   SP3: 根据实际安装需求添加轴心垫圈，正确安装左右曲柄，并使用 10mm 内六角扳手锁紧驱动侧固定螺丝，锁紧扭矩为 45 N·m

3. 旋转非驱动侧预压调节环，使其与 BB 外壳接触。
4. 使用 2.5 mm 内六角扳手锁紧预压调节环锁紧螺丝，确保调节环锁紧到位，无松动及间隙。
5. 轻轻摇晃曲柄，检查曲柄是否存在轴向或径向晃动。确认安装牢固、转动顺畅且无异常间隙，即完成安装。

⚠ 注意事项：

安装 INCOLOR SKYPIVOT SPR / SP3 天枢轻量化碳纤维轴曲柄组需要非常专业的工具和用品，我们强烈建议您让专业的自行车技师安装曲柄组。

INCOLOR SKYPIVOT SPR / SP3
LIGHTWEIGHT CARBON CRANKSET INSTALLATION GUIDE

INCOLOR

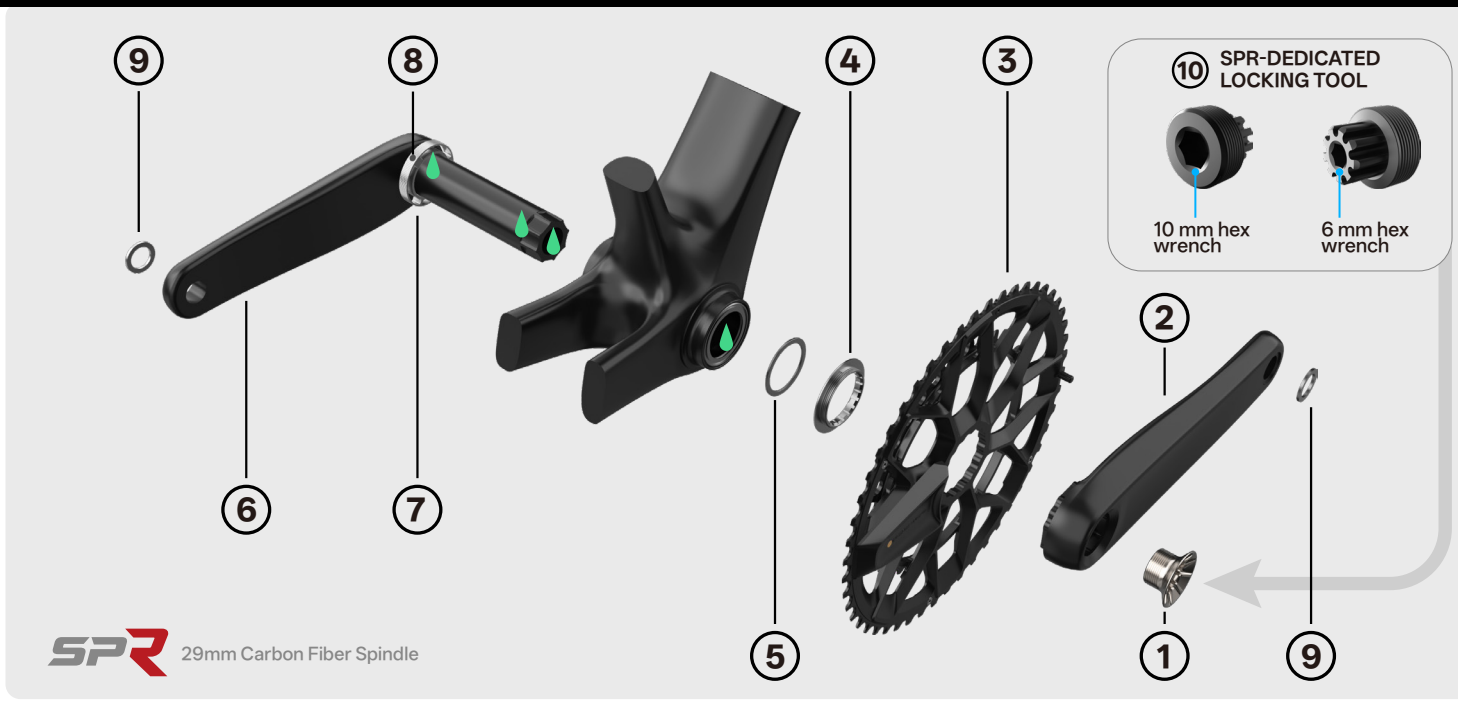

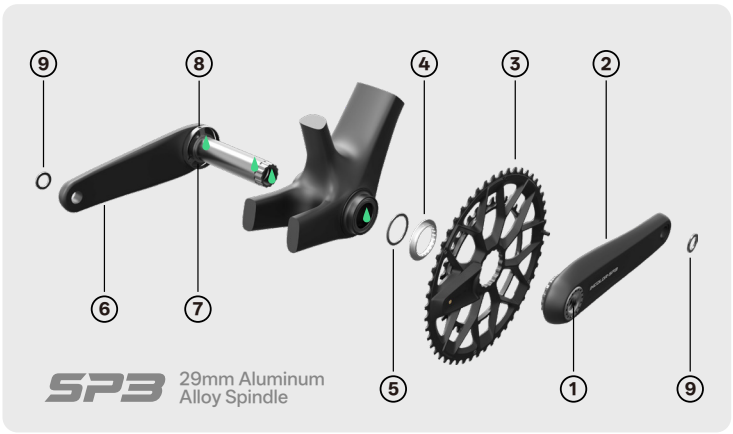

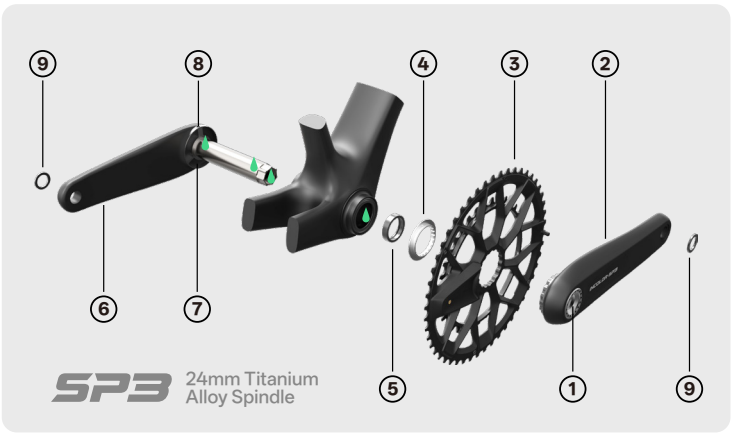

Apply grease to the surface of the green-marked area.

1 DRIVE SIDE FASTENING BOLT	2 DRIVE SIDE ARM	3 CHAINRING SET	4 SPINDLE SPACER	5 SPINDLE RING/ SPINDLE SPACER*
6 NON-DRIVE SIDE ARM	7 PRELOAD ADJUSTER	8 PRELOAD ADJUSTMENT RING LOCKING SCREW	9 Pedal Washer	10 SPR-DEDICATED LOCKING TOOL For SPR Cranksets Only

*29mm spindle models use spindle spacers, while 24mm spindle models use spindle rings. Each 29mm spindle product comes standard with one 1mm spindle spacer and one 1.5mm spindle spacer. The 1.5mm spacer must be installed at position (5) as shown. The 1mm spacer should be added as needed between the preload adjustment ring and the BB shell, depending on frame and bottom bracket compatibility.

Installation Procedure: :

1. Before installation, ensure that the preload adjustment ring on the non-drive side is set to the zero position. Apply an appropriate amount of lubricant evenly to the inner surface of the BB or the spindle contact surfaces.

2. **SPR:** Add the appropriate spindle spacers according to the specific installation requirements. Install the left and right crank arms in their correct positions. Using the dedicated locking tool and a 10 mm hex wrench, tighten the drive-side fixing bolt to a torque of 45 Nm. (Crankset Removal: Use the dedicated locking tool and a 10 mm hex wrench to remove the drive-side fixing bolt. Then, thread the opposite end of the dedicated locking tool into the drive-side crank arm. Use a 6 mm hex wrench to continuously tighten the tool until the non-drive-side crank arm separates from the drive-side crank arm.)

   SP3: Install the spindle spacers as required, then correctly install the left and right crank arms. Use an 10 mm hex wrench to tighten the drive-side fixing bolt to a torque of 45 N·m.

3. Rotate the preload adjustment ring on the non-drive side until it makes contact with the BB shell.

4. Use a 2.5 mm hex wrench to tighten the preload adjustment ring's fixing screw. Ensure the ring is securely locked in place without looseness or gaps.

5. Gently rock the crank arms to check for any axial or radial play. Ensure the crankset is securely installed, rotates smoothly, and has no abnormal clearance. Installation is now complete.

⚠ Precautions:

Installing the INCOLOR SKYPIVOT SP3 Lightweight Carbon Crankset requires specialized tools and equipment. We strongly recommend having the crankset installed by a professional bicycle mechanic.